KODEN CVS-126 Quick Reference

① Gain setting
H: High frequency
L: Low frequency

* The number shows the present set value of gain.
AF: Fishing mode
AC: Cruising mode

② Range mode
R:M: Manual
R:A: Auto range
R:AS: Auto shift

③ Power Voltage

④ Alarm Set Status
Arrival alarm
XTE alarm
Speed alarm
Water temp alarm

⑤ Status of [FUNC] key assignment
Image speed
Interference rejection
Color rejection
Noise rejection
Range mode
Shift
Zoom range
Zoom start
Background color
White line

⑥ Time mark

⑦ Rainbow pattern

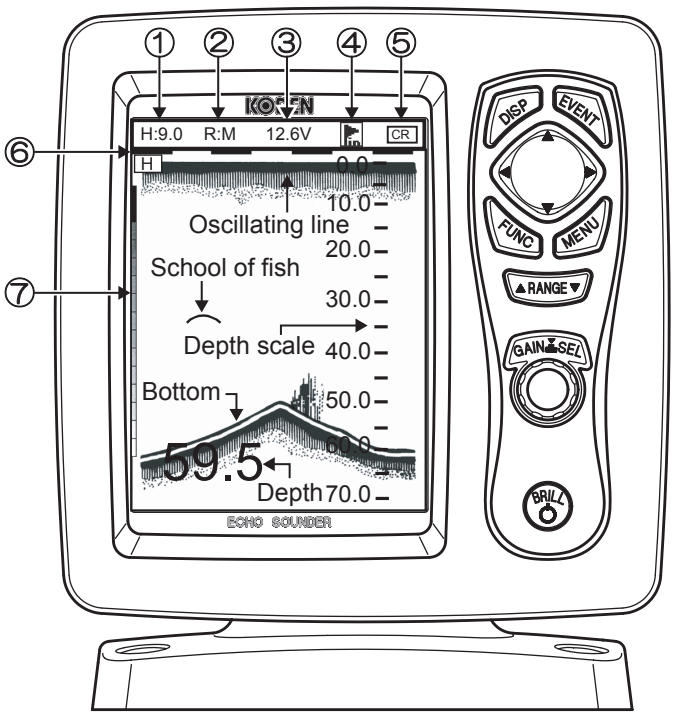

Select the display menu (【DISP】 key)

Press → Disp: NAV1/ Normal (H), Normal (H), Zoom (H), Dual Freq, Zoom (L), Normal (L), NAV2/ Normal (L)

Press → Press → Press

Rotate

※ Select by performing either operation.

Select the setting of preset function (【FUNC】 key)

The function differs depending on the [FUNC Key setting].
In case of [Image speed]:

Press → Image Speed: 2/1, 1/1, stop, 1/1.5, 1/2, 1/2.5, 1/3, 1/3.5, 1/4, 1/4.5

Press → Press → Press

Rotate

※ Select by performing either operation.

Select the range (【RANGE】 key)

Press → Range: 20.0, 30.0, 40.0, 50.0, 60.0, 70.0, 80.0, 90.0

Press → Press → Press

Rotate

※ Select by performing either operation.

Preset the destination / Preset the image (【EVENT】 key)

Depending on the [EVENT key set], the function differs.
In case of [Store pos]:

Press → Store the destination.

In case of [Store image]:

Press → Store the image of echo sounder.

※ The navigation data such as GPS is necessary.

Display the menu (【MENU】 key)

Press → Adjust, D.range, Image, Alarm1, Alarm2, NAV, Disp, Sonar, Next

Image speed	1/1
IR	Strong
Color rejection	0%
Noise rejection	0
TVG	Medium
TX power	Auto
Return	

→ Press

※ The menu closes.

※ The menu appears.

Power on /Power off (【BRILL】 key)

Power on. Press

Power off. Keep pressing for more than 3 seconds.

Gain select/ Gain adjust (【Knob】)

Press → ※ Direct → ① Gain 9.0 → Rotate → Press

Press → Gain Select: Manual, Cruising, Fishing

Rotate

Press → ① Gain 9.0 → Rotate → Press

※ When the manual is selected:

Press → ② Auto adjust 0 → Rotate → Press

※ When the Cruising mode is selected:
※ When the Fishing mode is selected:

Rotate → When rotating the [Knob], the menu of either ① or ② is displayed. (The menu of the previous operation is displayed.)

Adjust the brilliance (【BRILL】 key)

Press → Panel brill 10 → Rotate → Press

Press → Lcd brill 10 → Rotate → Press

※ Every time when pressing the [Brill] key, the item is alternately displayed.

0093132704-02

How to operate the menu

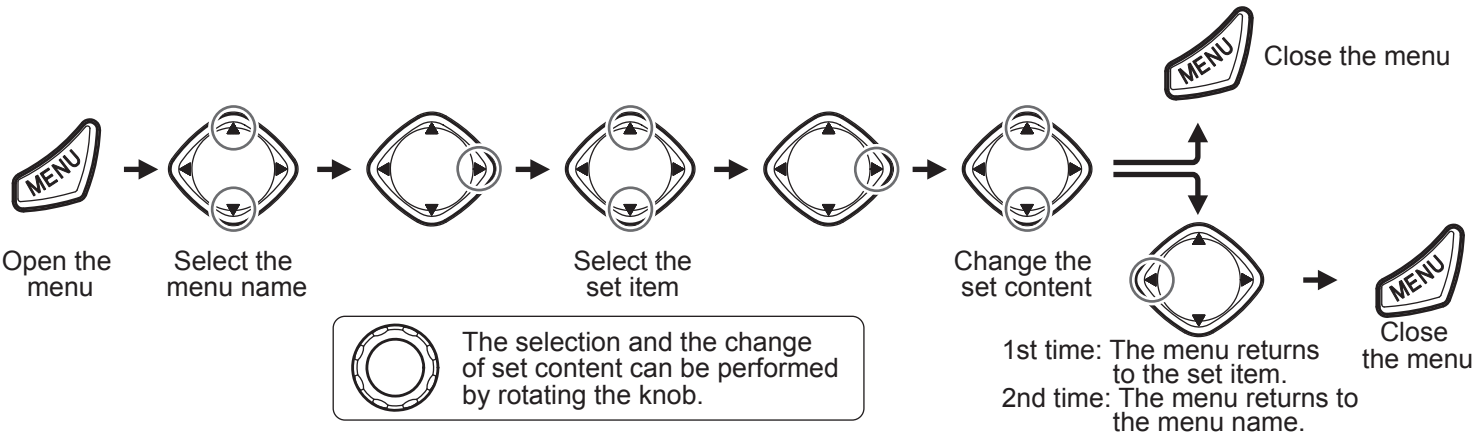

Function of Adjust Set Menu

Adjust
D.range
Image
Alarm1
Alarm2
NAV
Disp
Sonar
Next

Image speed	1/1	①
IR	Strong	②
Color rejection	0%	③
Noise rejection	0	④
TVG	Medium	⑤
TX power	Auto	⑥
Return		

① Change the image speed.
The image speed becomes slow in order of [2/1] → [1/1] → ------ [1/4.5].
When [stop] is selected, the image stops.
② It rejects the interference with other echo sounder.
When [Strong] is selected, the effect of rejection is strong.
③ It rejects the weak noise appearing on the display.
The greater the number is, the stronger the rejection becomes.
④ It rejects the speck-like noise appearing on the entire image.
The greater the number is, the stronger the rejection becomes.
⑤ Set the TVG.
The deep depth gain increases in order of [Weak] -> [Medium] -> [Strong].
⑥ It sets the TX power.

Function of display range set menu

Adjust
D.range
Image
Alarm1
Alarm2
NAV
Disp
Sonar
Next

Range mode	Manual	①
Shift	0m	②
Zoom type	BTM.	③
Zoom range	10.0m	④
Zoom start	0m	⑤
Range preset		⑥
Return		

① It changes the setting of range.
[Auto range]: It displays in the optimum range so that the bottom is always displayed.
[Auto shift]: The image shifts up and down so that the bottom is always displayed.
② It displays the image within the range starting with the set value.
③ It selects the zoom type in the image mode.
④ It sets the zoom range selected in③.
⑤ It sets the zoom starting position of image set in③.
⑥ It presets the range.

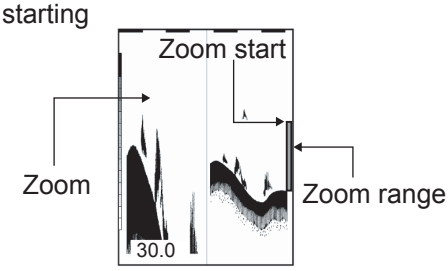

Function of display set menu

Adjust
D.range
Image
Alarm1
Alarm2
NAV
Disp
Sonar
Next

A scope	OFF	①
White line	OFF	②
Background color	Dark blue	③
Color tone	64 color	④
Depth value	Large	⑤
Water temp graph	OFF	⑥
Return		
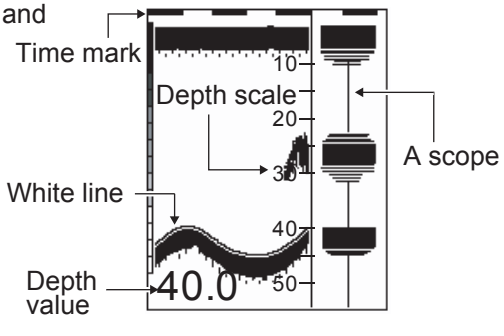
① It displays the strength of present echo as an amplitude image.
② It displays the surface of bottom in white
③ It selects the background color of display.
④ It selects the color tone of echo.
⑤ It selects the letter size of depth and depth scale.
⑥ It displays the present water temperature graph.