# DGPS RECEIVER MODULE

# DGPS-11

## TECHNICAL MANUAL

SI-TEX®

DOC NO. DGPS11 1-99
93158144-05

# Important Notice

| | |
|---|---|
| **Manual** | Keep this manual in a safe place where you can quickly access it. This manual must be passed to any new owner of the DGPS RECEIVER MODULE when it is transferred. |

The Global Positioning System (GPS) consists of a total of 28 GPS satellites that orbit on the earth, enabling you to calculate your position anywhere in the world, 24 hours a day if you can receive satellite signals. However, these satellites are controlled by the U.S. DoD and the satellite position and speed may be changed slightly without notice due to U.S. military strategy. Also, radio emission may be stopped due to equipment testing or adjustment or changes in their orbit, causing your positioning to fail. Thanks to the built-in beacon receiver circuit, this GPS receiver module provides better positioning accuracy than those measurement that rely only on the GPS. Note, however, that this higher accuracy can be degraded if beacon emission is stopped for maintenance of the DGPS reference station. During actual navigation, carefully compare the calculated data with all available navigation sources such as Loran C, Decca, other navigators, charts, visual navigation, depth, water temperature and others. It is your responsibility to make navigation judgments.

### About the positioning accuracy:

When positioning is done in a location where beacon emission is unreachable or when the DGPS is not turned on, positioning accuracy becomes that of the GPS level. Accuracy obtainable from the GPS is intentionally degraded by the U.S. for its military purposes. The GPS positioning accuracy is reduced to U.S. military strategy (SA). When the PDOP is 3 or less and when the GPS satellites are well positioned in orbit, you can get 95% of positioning data in the accuracy within 100 m. The remaining 5% of data can have errors to 200 m or more. If the antenna unit is shaded, or if the satellites are not positioned well, the PDOP may drop and even the 95% of positioning data may have errors exceeding 100 m.

### DGPS operation note:

Your position can be improved by DGPS correction. When you are communicating with other ships, you may be using the DGPS corrected position and they do not. You can advise them your position is DGPS originated.

## Pictorials

This manual uses the following pictorials to help in the understanding of safety instructions. Always follow these instructions carefully.

| | |
|---|---|
| **WARNING** | Always follow this instruction to prevent death or injury |
| **CAUTION** | Follow this safety instruction to avoid personal injury or damage to your property. |
| | Symbol "△" is a CAUTION or WARNING label describing the safety warning. (This symbol is an Electrical Shock warning label.) |
| | Symbol "⃠" is an instruction that you must not violate. (This symbol instructs NOT to disassemble any system components.) |
| | Symbol "●" is an operation instruction that you must follow. (This symbol shows the main power OFF instruction.) |

## WARNING <For System Operators>

Always follow this instruction to prevent death or injury.

| | | |
|---|---|---|
| | **Turn power OFF during abnormality.** | If smoke or a burning smell occurs, fire or electrical shock may result. Turn the power switch OFF and shut down the power supply immediately. Never attempt to repair the system yourself. Call for service. |
| | **Do not use in poor ventilation.** | If you cover this product or use in a closed place, it may malfunction or be damaged due to overheating. Use only where there is plenty of ventilation. |

## Installation Cautions <For Service Personnel>

Follow the installation instructions to avoid injury and system malfunction.

| | |
|---|---|
| **Installation in rigid position** | Mount your system securely on a mast, make sure that it is positively held in place, personal injuries can result in the event the system fell from its mount. |
| **Use correct installation materials.** | Use only the installation materials in the standard accessory pack. If the hose clamp strength is not sufficient, your unit may fall and be damaged. |
| **Keep away from heat source.** | Keep your unit away from a direct heat source as it may malfunction or burn. |
| **Use correct power source.** | Operate your system with the specified power voltage. Incorrect input voltage may cause damage, fire or injury. |

## Maintenance Cautions <For Maintenance Personnel>

Use the following safety precautions during internal inspection.

| | |
|---|---|
| **Check that power is OFF.** | To prevent electrical shock, make sure that the main power supply and the system power switch are both off. Also attach a safety label showing that service is in progress. |
| **Avoid EMI.** | Take care not to damage the ESDs (Electrostatic Sensitive Devices) as a result of static electricity from carpet and cloths. |
| **Avoid dust.** | Wear a safety mask to protect against dust during inspection or cleaning inside your system. |

## Operation Notes <For Operators>

Observe the following operation notes. System failure or deterioration can result. Periodic inspection and maintenance are required for maintaining the system in an optimum condition.

| | |
|---|---|
| **Backup important data.** | Save or log important data in backup memory or log sheets. The initial setup data and your storage data may be lost when the internal battery expires or when you service the electrical circuits. |

# Table of Contents

# What is the differential GPS?

he DGPS system can improve the GPS positioning accuracy in coastal waters. To get DGPS ositioning, you require a differential GPS navigator. The system works as follows;

our GPS navigator gets position data from satellites (measured by the GPS) and combines this with orrection data from a DGPS reference station (existing radio beacon station).

he DGPS station compares the known surveyed position of the station itself with current position iformation from the GPS system and calculates the error based on this data. The DGPS station ien sends correction data via (RTCM SC-104 format) using the beacon transmitter and to your IGPS receiver module. The DGPS receiver module receives this information and applies this correc-on to your navigator.

'he DGPS receiver module can eliminate most of the positioning error and can improve your posi-oning accuracy to as little as 5 to 10 meter repeatable error. The accuracy is higher the closer you re to the beacon station. Generally speaking, the DGPS system can be used within 100 to 200 autical miles from the reference station. (RTCM: Radio Technical Commission for Maritime Ser-ice)

'he DGPS-11 DGPS receiver module built by uniting the DGPS beacon receiver and the GPS eceiver module. It directly transmits high accuracy positioning data from the DGPS receiver module o other navigation aid devices.

**lote 1: This DGPS receiver module could be connected to a navigator from one manufacturer to another and vice versa. We recommend, however, that you should use both a receiver and a navigator made by our company to eliminate any potential interfacing problems.**

**2: The term, Differential GPS navigator, is a name applied by KODEN, to describe our DGPS receivers on which the navigation data is displayed.**

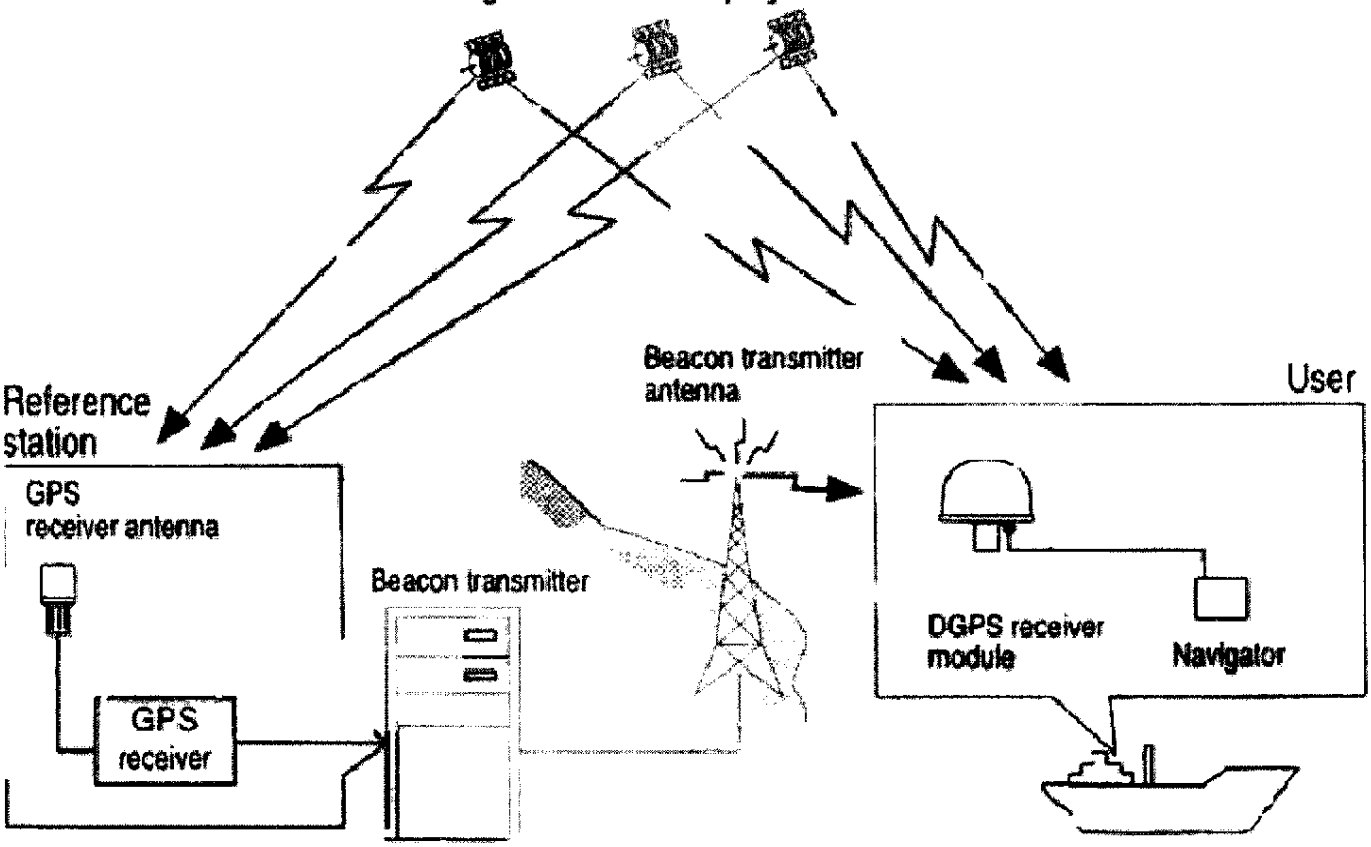

# General

## DGPS-11 DGPS receiver module

The DGPS-11 built by uniting the DGPS beacon receiver, optimum for the DGPS positioning, and the GPS receiver module. Contained in its antenna housing are the GPS antenna module, incoming GPS signal processor circuit, beacon antenna circuit, incoming beacon signal processor circuit and power supply/interfacing circuit, and a 10 meters (33 ft)/15 meters (49 ft) connecting cable. The GPS antenna module consists of a micro-strip patched antenna and a RF amplifier. And the beacon antenna circuit consists of the ferrite loop antenna (a magnetic "H" field loop type) containing the 90° phase composition circuit, and the RF amplifier circuit. The power supply/interfacing circuit contains a switching regulator and the interface circuit. The connecting cable (six-way conductor shielded cable) is connected to the power supply/interfacing circuit by a 7-pin connector inside the unit.

## Operation

The DGPS receiver module works with the host equipment to improve accuracy. After the DGPS-11 DGPS receiver module is properly installed and connected, you turn on the host equipment.
Input data format of the host equipment must be set for NMEA-0183 (ver. 1.5 or later) to accept the correction data from the DGPS receiver module.
The DGPS receiver module is set to automatic station selection mode as the default value when shipped from the factory. For station selection mode and parameter programming, please refer to **"Interfacing"** on page 4, **"Local geodetic systems"** on page 17 and **"Table of DGPS reference stations"** on TECHNICAL MANUAL SUPPLEMENT.

## Back-up battery

The DGPS receiver module is equipped with a lithium battery for memory back up. The battery retains the data of the beacon frequency and bit rate that is programmed through a personal computer. The battery also retains the beacon almanac data required for DGPS position fix so as to ensure warm start in less than 60 seconds. (Note: The warm start is only possible after the cold start process has been completed.)
Under normal usage, the lithium battery should be replaced **every five years**. When the battery fails and if DC power is not supplied, the programmed parameters will be reset to the default values.

**Bit rate** : Rate of DGPS correction data transmitted by a beacon station. (per second)
**Beacon almanac** : Frequency, transmission speed (bit rate) and position data of the beacon station of the station from which the user's navigator is receiving the data.

Some of the registered beacon stations may change their transmitting frequency and bit rate without notice. In such a case, you must select the desired station by manual means on the navigator connected. Refer to the Table of DGPS reference stations (see TECHNICAL MANUAL SUPPLEMENT) for registered beacon station data.

# Interfacing

## Setup procedure

The GPS setup (antenna height, mask values, datum, averaging factor, differential switch and differential time out) and beacon setup (frequency and bit rate) can be programmed by sending input data through a personal computer. Input data must be 8-bit ASCII codes. It takes approximately 2 seconds for the data entered from a personal computer to the DGPS receiver module. It can be confirmed GPS setting by reading satellite information (PKODG, 1 sentence) and beacon setting by reading beacon receiver receiving status (GPMSS or CRMSS sentence). For further details, refer to the "Connecting to personal computer" on page 11.

## Initialization

The initialization function is used to check the CPU function (ROM, RAM, LSI and CLOCK) and to clear the RAM memory.

Initialization is necessary when:

1) The programmed parameters in the sentence PKODG, 1 and GPMSS/CRMSS have not been set as desired.
2) The data from the DGPS receiver module is not correctly displayed.

To activate the initialization, send data 1E1E1E 0 <CR> <LF> to the DGPS receiver module.

Initialization is completed in one second. After executing the initialization, all the programmed parameters are canceled and settings return to the factory default settings and you may need to program parameters again.

## Input data format

**Baud rate : 4800**

**GPS setup** X 0 0 0 0 <CR> <LF>

1 Header (HEX)
2 Numbers (ASCII code,Integers)
3 End of sentence delimiter

| Programmable parameters | Header (HEX) | Range | Default setting |
|---|---|---|---|
| Antenna height | 10 | 0-9999 m | 0 |
| Elevation angle | | 0-45 degrees | 10 |
| PDOP mask | | 0-30 | 7 |
| HDOP mask | 13 | 0-20 | 10 |
| S/N mask | 14 | 0-25 | 3 |
| Datum | 15 | 00-85 | 00 : WGS-84 |
| Averaging factor | 16 | 1-3 | 3 |
| L/L unit of GGA sentence | 17 | 0:0.001, 1:0.0001 minutes | 0:0.001 |
| Differential switch | 18 | 0:OFF, 1:ON | 1: ON |
| Differential time out | 19 | 10 - 180 sec | 100 |
| Initialization | 1E1E1E | 0 | NOT APPLICABLE |

**Notes:**

If two dimensional mode is required, PDOP mask must be set to "0".

Averaging factor 1 gives the longest average while factor 3 the shortest.

When L/L unit is selected to 1, the resolution of HDOP value in the GGA sentence change from 1 to 0.1

Setting of range can be made by least required digits of integers .

## Beacon setup

Bit rate : 4800

| Programable parameters | Range | Default setting |
|---|---|---|
| Beacon station selection | A:automatic, M:manual | A:automatic |
| Beacon receiving frequency | 283.5 to 325.0 kHz | ———— |
| Beacon data bit rate | 50, 100, 200 bit/sec | ———— |
| MSS sentence output interval | 5 seconds | 5 |

To set the beacon station frequency and bit rate in the DGPS receiver module, an MSK sentence in NMEA-0183 format is required to be inputted via the serial input line from a navigator. Automatic station mode will be automatically selected if no MSK sentence is received.

## Input data configuration

Parity bit: none

The bit configuration of one byte is as specified below.

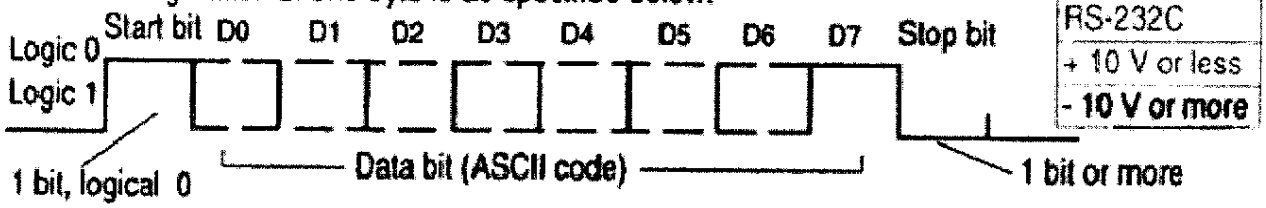


### Input sentence

**GP MSK** — Beacon Receiver Set

$ GP MSK, XXX.X, A/M, XXX, A/M, XX, * hh <CR> <LF>

- $ GP MSK: Start of sentence
- MSK: Talker device
- XXX.X: Sentence format
- XXX.X: Received frequency (283.5 to 325.0 kHz)
- A/M: Auto (A) / Manual (M)
- XXX: Beacon data transmission speed (can be selected from 50, 100, 200 bits/second)
- A/M: Auto (A) / Manual (M)
- XX: MSS sentence output interval (5 seconds)
- hh: Checksum

**CRQ,MSK** — MSK Sentence Output Request to Beacon Receiver

$ GP CRQ,MSK * 2E <CR> <LF>

- $ GP: Start of sentence
- GP: Talker device
- CRQ,MSK: Sentence format
- 2E: Checksum

The GPMSK (Ver. 2.0 or 1.5) sentence in RS-232C level or CRMSK (Ver. 2.0 or 1.5) sentence in TTL level is output once.



DGPS-11 TECHNICAL MANUAL - 02

# Output data format

**The output data format is NMEA-0183 (Ver. 2.0/1.5) at 4800 baud. Data output level is RS-232C and TTL. Refer to "Recommended connection" (page 11).**

## Output data configuration

The bit configuration of one byte is as specified below.

Parity bit: none

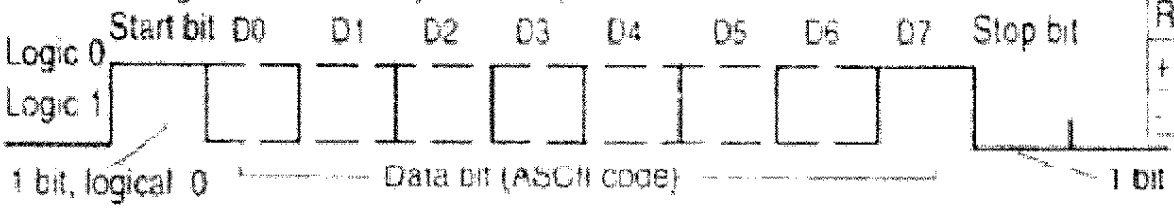


| RS-232C | TTL |
|---|---|
| + 10 V or less | 5 V |
| - 10 V or more | 0 V |

## Output data specifications

| Baud rate | Output level | Output current | Sentence | Update rate |
|---|---|---|---|---|
| 4800 baud | RS-232C (Version 2.0) | Maximum 40 mA | GGA+GLL+GSA+GSV+RMC+VTG+ZDA +PKODA+PKODG, 1+PKODG, 7 +MSK +MSS | 1 to 3 seconds<br>once 5 seconds |
| | RS-232C (Version 1.5) | Maximum 40 mA | GGA+GLL+PKODA+PKODG, 1+VTG +MSK +MSS | 1 to 3 seconds<br>once 5 seconds |
| | TTL (Version 2.0) | Maximum10 mA | GGA+GLL+VTG+ZDA +MSK+MSS+SNU | 1 second<br>5 seconds |
| | TTL (Version 1.5) | Maximum10 mA | GGA+VTG +MSK+MSS+SNU | 1 second<br>5 seconds |

## Output sentence

| Descrimination | Contents of data field |
|---|---|
| GPMSK (Ver.1.5/2.0) | Beacon Receiver Set<br>**$ GP MSK, XXX.X, A/M, XXX, A/M, <CR> <LF>**<br>Sentence of format; Auto (A)/Manual (M); Beacon data transmission speed (bit/second); Talker device; Auto (A)/Manual (M); Start of sentence; Receiving frequency (283.5 to 325.0 kHz)<br>RS-232C: GPMSK<br>TTL: CRMSK |
| GPMSS (Ver.1.5/2.0) | Beacon Receiver Receiving Status Information<br>**$ GP MSS, , XX, XXX.X, XXX <CR> <LF>**<br>Sentence of format; Beacon data transmission speed (050, 100 and 200 bits/second); Talker device; Received frequency (283.5 to 325.0 kHz); Start of sentence; Signal-noise ratio (0 to 30 dB)<br>RS-232C: GPMSS<br>TTL: CRMSS |

## CRSNU (Ver.1.5/2.0)

### Beacon Receiver Receiving Status Information

**$ CR SNU, A/V <CR> <LF>**

- A/V: A: Available (synchronous), V: Unavailable (asynchronous)
- SNU: Sentence of format
- CR: Talker device
- $: Start of sentence

**TTL level only output**

## GPGGA (Ver.1.5/2.0)

### Global positioning system fix data

: Ver. 2.0 only output

**$ GP GGA, hhmmss, XXXX.XXX, N/S, XXXXX.XXX, E/W,**

- GGA: Sentence of format
- GP: Talker device
- $: Start of sentence
- hhmmss: UTC of position fix (hours, minutes, seconds)
- XXXX.XXX: Latitude
- N/S: N:North S:South
- XXXXX.XXX: Longitude
- E/W: E:East W:West

**X, XX, XXX, 0/- XXXX, M, 0/- XXX, M, XXX, XXX * hh <CR> <LF>**

- X: GPS quality indicator (0: fix not available, 1: GPS fix, 2: DGPS fix)
- XX: Number of satellites in use
- XXX: Horizontal dilution of precision
- 0/- XXXX, M: Antenna height (m) (0: positive, –: negative)
- 0/- XXX, M: Geoidal height (WGS-84) (m) 0 or – (0: positive, –:negative)
- XXX: Age of differential GPS data
- XXX: Differential reference station ID
- hh: Checksum

**RS-232C: GPGGA**
**TTL: CRGGA**

## GPGLL (Ver.1.5/2.0)

### Geographic position, Latitude/Longitude

: Ver. 2.0 only output

**$ GP GLL, XXXX.XX, N/S, XXXXX.XX, E/W * hh <CR> <LF>**

- GLL: Sentence of format
- GP: Talker device
- $: Start of sentence
- XXXX.XX: Latitude
- N/S: N: North S: South
- XXXXX.XX: Longitude
- E/W: E: East W: West
- hh: Checksum

**RS-232C: GPGLL**
**TTL: CRGLL**

## GPGSA (Ver. 2.0)

### GPS DOP and Active Satellites

**$ GP GSA, A, X, XX, XX, XX, XX, , , , , , , , XX, XX.X, XX.X, * hh <CR> <LF>**

- GSA: Sentence of format
- GP: Talker device
- $: Start of sentence
- A: Automatic (A) or manual (M) 2D/3D switching
- X: Positioning mode
  - 1: No positioning
  - 2: 2D positioning
  - 3: 3D positioning
- XX, XX, XX, XX, , , , , , , , XX: PRN numbers of satellites used in solution (null for unused fields)
- XX.X: PDOP
- XX.X: HDOP
- hh: Checksum

## GPGSV — GPS Satellite in View

(Ver. 2.0)

$ GP GSV, X, X, XX, XX, XX, XXX, XX, • • • • • • •, * hh <CR> <LF>

- Start of sentence: $
- Talker device: GP
- Sentence of format: GSV
- Total number of messages (1 to 3): X
- Message number (1 to 3): X
- Total number of satellite in view: XX
- Satellite PRN No.: XX
- Elevation angle: XX
- Azimuth angle: XXX
- S/N ratio (00 to 25): XX
- 2nd to 4th PRN: • • • • • • •
- Checksum: * hh

## GPRMC — Recommended Minimum Specific GPS/TRANSIT data

(Ver. 2.0)

$ GP RMC, hhmmss, A/V, XXXX.XXX, N/S, XXXXX.XXX, E/W, XXX.X, XXX.X, XXXXXX, , * hh <CR> <LF>

- Start of sentence: $
- Talker device: GP
- Sentence of format: RMC
- UTC of position (hours, minutes, seconds): hhmmss
- V (Invalid) or A (Valid) data: A/V
- Latitude: XXXX.XXX
- N: North / S: South: N/S
- Longitude: XXXXX.XXX
- E: East / W: West: E/W
- Speed over ground (knots): XXX.X
- Course (true bearing): XXX.X
- Date DDMMYY (DAy, Month, Year): XXXXXX
- Checksum: * hh

## GPVTG — Course and Ground Speed

(Ver. 2.0)

$ GP VTG, XXX.X, T, , , XXX.X, N, XXX.X, K * hh <CR> <LF>

- Start of sentence: $
- Talker device: GP
- Sentence of format: VTG
- Course (true bearing): XXX.X, T
- Speed over ground (knots): XXX.X, N
- Speed over ground (km/h): XXX.X, K
- Checksum: * hh

RS-232C: GPVTG
TTL: CRVTG

## GPVTG — Course and Ground Speed

(Ver. 1.5)

$ GP VTG, XXX, T, XXX, M, XX.X, N, XXX, K * hh <CR> <LF>

- Start of sentence: $
- Talker device: GP
- Sentence of format: VTG
- Course (true bearing): XXX, T
- Course (magnetic bearing): XXX, M
- Speed over ground (knots): XX.X, N
- Speed over ground (km/h): XXX, K
- Checksum: * hh

RS-232C: GPVTG
TTL: CRVTG

## GPZDA — Time and Date

(Ver. 2.0)

$ GP ZDA , hhmmss, XX, XX, XXXX. , * hh <CR> <LF>

- Start of sentence: $
- Talker device: GP
- Sentence of format: ZDA
- UTC (hours, minutes, seconds): hhmmss
- Day: XX
- Month: XX
- Year: XXXX
- Checksum: * hh

RS-232C: GPZDA
TTL: CRZDA

## PKODA (Ver.1.5/2.0)

**Satellites information (unique Koden's sentence)**

**$ PKODA, P/H, XXX.X, XX, XX, XX, XX, XX, XX, XX, XX, XXXX, M, XXX.X, N,**

- $ — Start of sentence
- PKODA — Proprietary sentence ID
- P — Manufacture's mnemonic code
- H — Revision symbol specified by KODEN
- XXX.X — PDOP or HDOP
- XX, XX, XX, XX — DOP
- XX, XX, XX, XX — Satellites numbers (1st to 4th PRN)
- XXXX — S/N (1st to 4th PRN)
- M — Altitude
- Meters
- XXX.X — Speed
- N — Knots

**XXX.X, 0/- XX.X, X, X <CR> <LF>**

- XXX.X — Bearing degree
- 0/- — Deviation of oscillator frequency (0: positive, –: negative)
- XX.X — 0.001 minutes of latitude
- X — 0.001 minutes of longitude

## PKODG, 1 (Ver.1.5/2.0)

**Satellites information (unique Koden's sentence)**

**$ PKODG, 1, X, XX, +/- XX, XXX, XX, XX, XX, XX, XX,**

- $ — Start of sentence
- PKODG — Proprietary sentence ID
- 1 — Manufacture's mnemonic code
- X — Revision symbol specified by KODEN
- X — Quality indicator (1: GPS fix, 0: No fix)
- XX — PRN number (Space vehicle)
- +/- XX — Elevation angle
- XXX — Azimuth of satellite
- XX — Elevation angle mask
- XX — S/N mask
- XX — HDOP mask
- XX — PDOP mask
- XX — Averaging factor

**XX, XX, XX, XX <CR><LF>**

- XX — Datum
- XX — Month
- XX — Day
- XX — Year

## PKODG, 7 (Ver. 2.0)

**Differential information (unique Koden's sentence)**

**$ PKODG, 7, X, X, XXX <CR> <LF>**

- $ — Start of sentence
- PKODG — Proprietary sentence ID
- 7 — Manufacture's mnemonic code
- X — Revision symbol specified by KODEN
- X — DGPS (1: ON, 0: OFF)
- X — DGPS quality indicator (1: DGPS ON, 0: DGPS OFF)
- XXX — Time out (010 to 180 sec)

# Specifications

## GPS section

Specifications subject to change without notice

| | | |
|---|---|---|
| Receiving frequency | | 1575.42 MHz ± 1 MHz |
| Receiving channel | | Digital 11-channel parallel/sequential |
| Receiving code | | CA code |
| Sensitivity | | Better than -130 dBm (elevation angle 5° or more) |
| Accuracy (PDOP ≦ 3) | Position | 10 mRMS (at DGPS ON), 100 m 2DRMS (at DGPS OFF) |
| | Speed | 0.1knots RMS (at DGPS ON) |

## Beacon section

| | | |
|---|---|---|
| Receiving frequency | | 283.5 to 325.0 kHz |
| Receiver type | | Double superheterodyne |
| Acquisition time | Auto | Less than 1min. (bit rate:200, S/N: 8dB) |
| | Manual | Less than 30sec. (bit rate:200, S/N: 8dB) |
| Recommended antenna | | Whip antenna (KBG-1), Ferrite-loop antenna (KBG-2) |
| Channel separation | | 500 Hz step |
| Modulation | | MSK (bit rate: 50, 100, 200) |
| Sensitivity | | Better than 10μV/m |
| Signal to noise ratio (S/N) | | 6 dB or better |
| Dynamic range | | 92 dB |
| Station selection | | Auto (required position information) or manual |
| Beacon station data (for automatic station selection) | | Automatic beacon almanac entry, built-in station list in the world |

## Overall

| | | | | |
|---|---|---|---|---|
| Data communication | | | Synchronous bidirectional data communication | |
| Input data format | a)Baud rate | | 4800 | |
| | b)Programmable parameter | | | |
| | 1)Antenna height | | 0 to 9999 m (Default: 0) | Different default setting, optional |
| | 2)Mask value | Elevation | 0° to 45° (Default:10) | |
| | | PDOP | 0 to 30 (Default: 7) | |
| | | HDOP | 0 to 20 (Default: 16) | |
| | | S/N | 0 to 25 (Default: 3) | |
| | 3)Datum | | 00 to 85 (Default:00, WGS-84) | |
| | 4)Averaging factor | | 1 to 3 (Default: 3) | |
| | 5)L/L unit of GGA | | 0: 0.001' or 1: 0.0001'(Default: 1) | |
| | 6)Differential switch | | 0: OFF or 1: ON (Default: 1) | |
| | 7)Differential time out | | 10 to 180 sec (Default:100) | |
| | 8)Beacon station selection | | A:Automatic, M:Manual (Default:A) | |
| | 9)Beacon receiving frequency | | 283.5 to 325.0 kHz | |
| | 10)Beacon data bit rate | | 50, 100, 200 | |
| | 11)MSS sentence output interval | | 5 sec. | |
| | c)Differential data | | RTCM SC-104 format, 4800 baud | |
| | d)Input data level | | RS-232C | |
| Output data format | | | NMEA-0183 version 2.0 | Ver.1.5 or other format: optional |
| | a)Baud rate | | 4800 | 2400 or 9600: optional |
| | b)Data contents | | | |
| | Latitude/longitude (GGA) | | In increments of 0.001 minute or 0.0001 minutes (Default: 0.001 minutes) | |
| | Time | | UTC (hour, minute, second) | |
| | Altitude | | In inclements of 1 meter | |
| | Speed | | In inclements of 0.1 knot, 0.1 km/h | |
| | Course | | In inclements of 0.1° | |
| | Others | | HDOP, position mode | |
| | c)Output format | RS-232C (Version 2.0) | GGA+GLL+GSA+GSV+RMC+VTG+ZDA+PKODA+PKODG, 1+PKODG, 7 | Interval of every 1 to 3 sec |
| | | | +MSK | Once when CRO,MSK is input |
| | | | +MSS | Interval of every 5 sec |
| | | (Version 1.5) | GGA+GLL++PKODA+PKODG, 1+VTG | Interval of every 1 to 3 sec |
| | | | +MSK | Once when CRO,MSK is input |
| | | | +MSS | Interval of every 5 sec |
| | | TTL (Version 2.0) | +GGA+VTG+ZDA | Interval of every 1 sec |
| | | | +MSK+MSS+SNU | Interval of every 5 sec |
| | | TTL (Version 1.5) | GGA+VTG | Interval of every 1 sec |
| | | | +MSK+MSS+SNU | Interval of every 5 sec |
| | d)Output data level | | RS-232C, TTL | |
| | e)Output data current | | 40 mA or less (RS-232C), 10 mA or less (TTL) | |
| Backup memory | | | Retained by lithium battery | |
| Power supply | | | 10.8 to 31.2 VDC | |
| Power consumption | | | 5 W or less (at 12 VDC) | |
| Temperature range | a)Operation | | -25°C to +60°C (-13° to 140°F) | |
| | b)Storage | | -30°C to +70°C (-22° to 158°F) | |

# Interconnection diagram

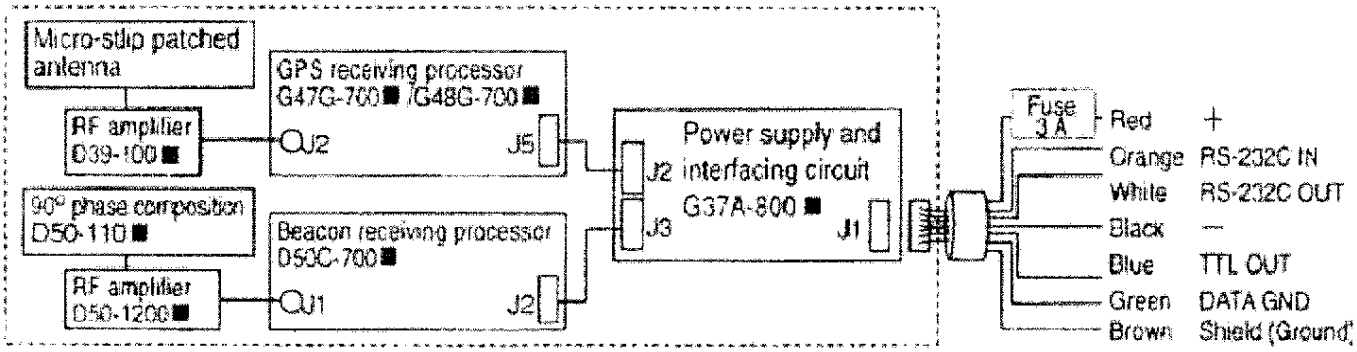


## Recommended connection

Fishing and navigational aid means a TRACK DISPLAY, MARINE RADAR, CHROMASCOPE, etc.

### Connecting to fishing and navigational aid

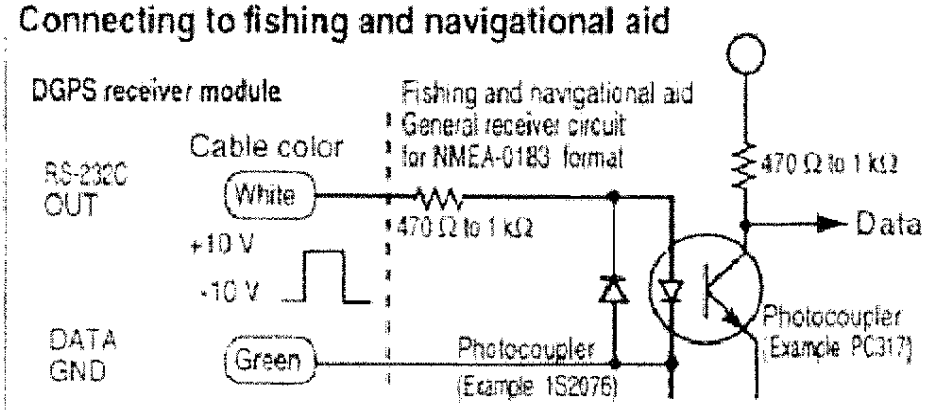


### Connecting to personal computer (IBM PC/AT compatible)

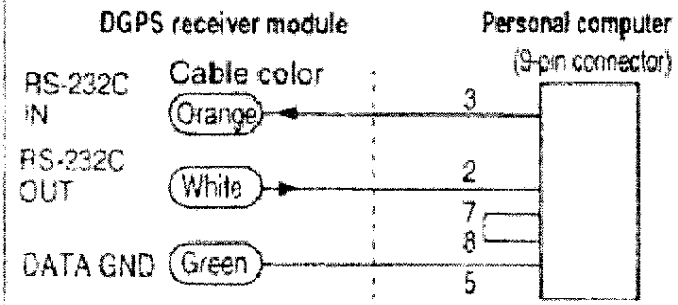


### Connecting to personal computer (IBM compatible)

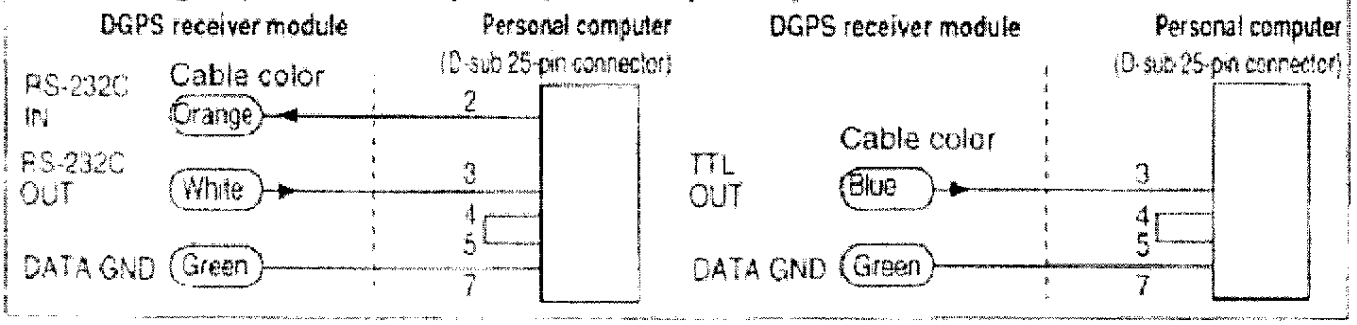

# Standard equipment list

| No. | Article | Rate | Remarks | Weight/length | Quantity |
|---|---|---|---|---|---|
| 1 | DGPS receiver module<br>Connecting cable | DGPS-11 | H-field type<br>Connected to DGPS-11 and one end plain | 1.6 kg (3.6 lb)<br>10 m (32 13/16 ft) | 1 |
| | | | H-field type<br>Connected to DGPS-11 and one end plain | 1.8 kg (4.0 lb)<br>15 m (49 3/16 ft) | |
| 2 | Fuse | F-7142, 3A | For spare | | 1 |
| 3 | Operation manual | | | | 1 |

# Options

| No. | Article | Rate | Remarks | Weight/length |
|---|---|---|---|---|
| 1 | Connector | 1005 | 5 pin | |
| | | 1006 | 6 pin | |
| 2 | Antenna holder | RAH-29 | Ratchet mount | 0.68 kg (1.5 lb) |
| 3 | Power rectifier | PS-003A | With two 5 A fuses | 2.6kg(6.2lb) |
| 4 | AC power cable | VV-2D8 | Both end plain | 3m(9 13/16ft) |

# Outline and dimensions

Unit: mm

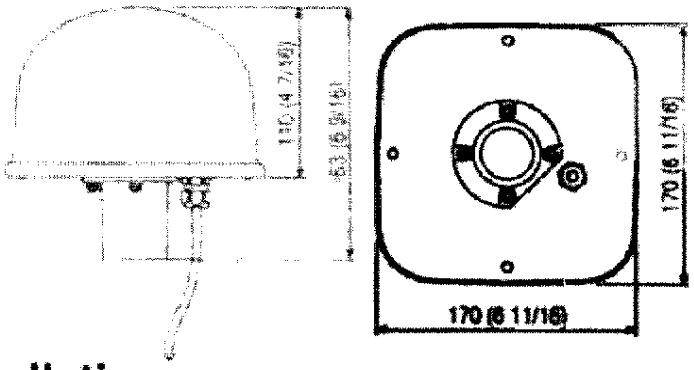


Weight : 1.2 kg (2.7 lb)
1.6 kg (3.6 lb) including cable (10 m)
1.8 kg (4.0 lb) including cable (15 m)

# Installation

The DGPS-11 is a magnetic field type antenna, thus grounding not required

**Case 1**

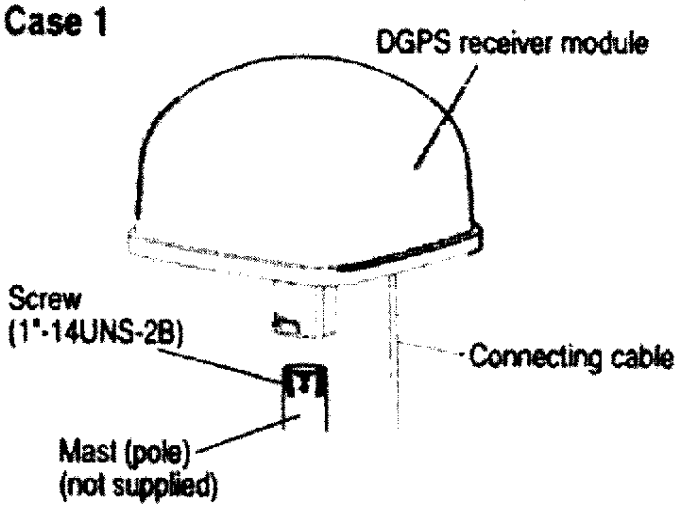


**Case 2**

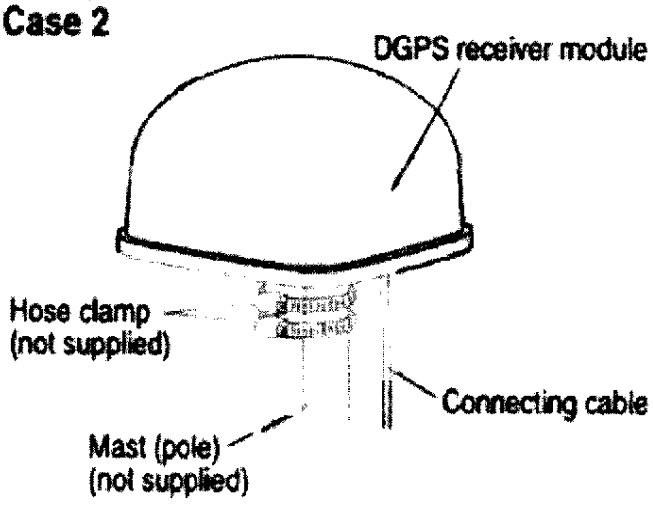

# Installation site

Make sure you install the DGPS receiver module with a clear view of the horizon. Objects mounted above the DGPS receiver module or too close to the DGPS receiver module may cause some signal to noise ratio degradation and affect the measuring time. The following conditions should be observed, where possible.

Mount the unit:

(1) As far from other metallic objects as possible.
(2) At least 4 meters (13.2 feet) away from the MF/HF reversed L-type TX antenna, VHF or HF whip antenna.
(3) At least 1.5 meter (4.9 feet) above the MF/HF reversed L-type TX antenna.
(4) At least 1 meter (3.3 feet) away from the receiving antenna.
(5) Outside radar transmitting beam (30° to 40°).
(6) At least 1 meter (3.3 feet) away from the radar antenna.
(7) At least 5 meters (16.5 feet) away from an Inmarsat antenna.
(8) At least 3 meters (9.8 feet) away from an ADF loop antenna.
(9) At least 2 meters (6.6 feet) away from the engine.
(10) At least 0.5 meters (1.6 feet) above any large metal surface.

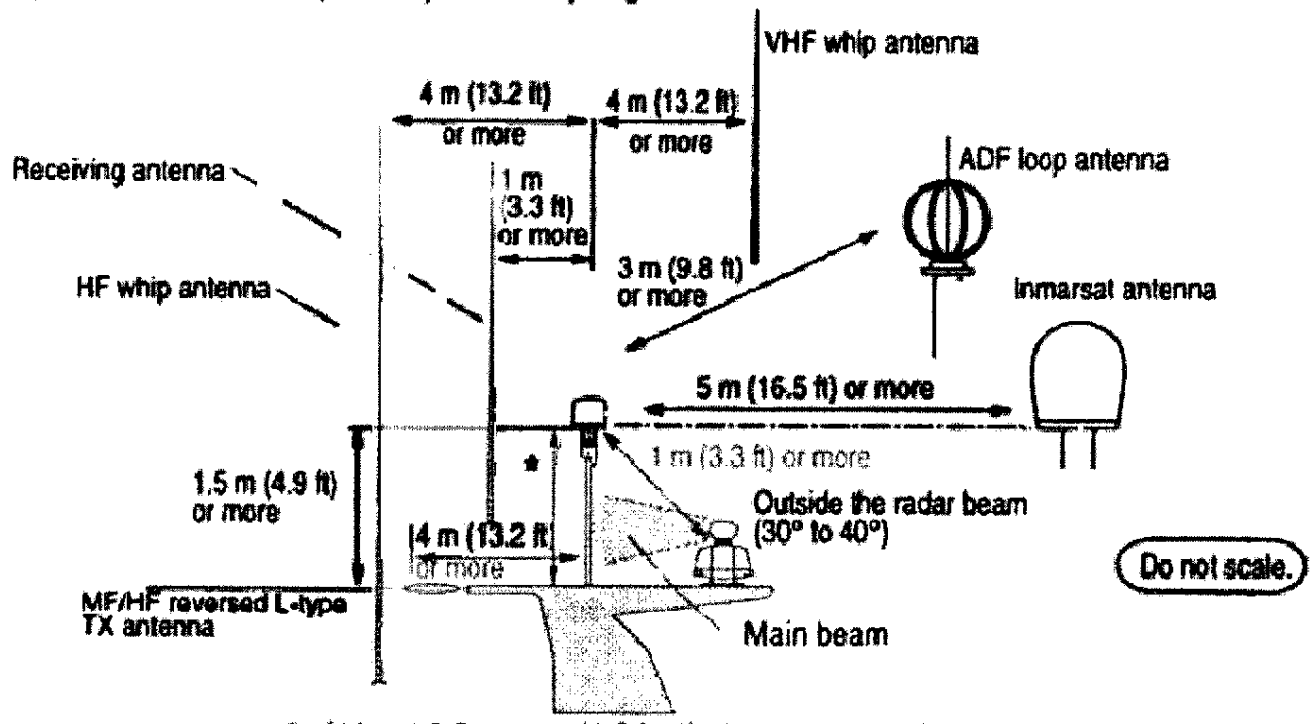


* At least 0.5 meters (1.6 feet) above any metal surface.

**If you have difficulty in complying with all of the above conditions mentioned at 1 through 10, then prioritise the compliance with item 10, and site as far away as possible from 1 through 9.**

| Guide line | | |
|---|---|---|
| Object | Size in diameter | Minimum distance |
| Pole | 10 cm (3 15/16 inches) | 1.5 m (4.9 ft) |
| Pole | 30 cm (11 13/16 inches) | 3.0 m (9.8 ft) |

# NOTES PAGE

# Local geodetic systems

## In alphabetical order

| Name | No | Name | No. |
|---|---|---|---|
| ALASKA/CANADA | 4 | LIBERIA 64 | 57 |
| ARC 50 | 29 | MAHA 71 | 58 |
| ARC 60 | 30 | MALAYSIA | 23 |
| ARGENTINA | 39 | MALDIVE | 48 |
| ASCENSION | 31 | MARCUS | 35 |
| AUSTRALIAN 84 | 6 | MARSHALL | 82 |
| BAHRAIN | 27 | MASCARENE | 73 |
| BERMUDA | 37 | MIDWAY 61 | 62 |
| BRAZIL | 45 | MOROCCO | 61 |
| CANARY | 68 | NAD-27 | 3 |
| CAYMAN BRAC | 56 | NAD-83 | 10 |
| CHATHAM | 43 | NEW GEORGIA | 46 |
| COCOS | 28 | NEW ZEALAND | 13 |
| COLOMBIA | 38 | NIGERIA | 63 |
| CORVO/FLORES | 65 | OMAN | 67 |
| DIEGO GARCIA | 52 | PARAGUAY | 44 |
| DJAKARTA | 22 | PHILLIPPINES | 19 |
| EAST FALKLAND | 76 | PHOENIX | 40 |
| EAST MALAYSIA | 79 | PITCAIRN | 69 |
| EASTER | 47 | PORTO SANTO | 77 |
| EFATE | 36 | PUERTO RICO | 71 |
| EGYPT | 66 | QATAR | 72 |
| ENGLAND | 20 | ROME 40 | 15 |
| ERITREA | 60 | SALVAGE | 59 |
| ETHIOPIA | 25 | SANTA MARIA | 75 |
| EUROPEAN 50 | 5 | SANTO | 74 |
| EUROPEAN 79 | 14 | SAUDI ARABIA | 17 |
| FAIAL | 78 | SOMALIA | 26 |
| FIJI | 81 | SOUTH AFRICA | 16 |
| FINLAND | 84 | SOUTH AMERICA | 8 |
| FLORIDA | 41 | SOUTH ASIA | 7 |
| GREENLAND | 9 | SOUTH CHILE | 70 |
| GUADAL CANAL | 50 | SRI LANKA | 54 |
| GUAM 63 | 49 | ST. HELENA | 34 |
| HAWAII | 21 | SURINAM | 83 |
| HONG KONG 63 | 51 | SWEDEN | 85 |
| ICELAND 55 | 11 | TERN | 33 |
| IRELAND 65 | 12 | TOKYO | 2 |
| INDIAN/NEPAL | 18 | TRINIDAD | 64 |
| IWO JIMA | 32 | TRISTAN | 80 |
| JAPAN | 24 | TUNISIA | 42 |
| JOHNSTON | 53 | WGS-72 | 1 |
| KELGUELEN | 55 | WGS-84 | 0 |

## In numerical order

| No. | Name | No. | Name |
|---|---|---|---|
| 0 | WGS-84 | 43 | CHATHAM |
| 1 | WGS-72 | 44 | PARAGUAY |
| 2 | TOKYO | 45 | BRAZIL |
| 3 | NAD-27 | 46 | NEW GEORGIA |
| 4 | ALASKA/CANADA | 47 | EASTER |
| 5 | EUROPEAN 50 | 48 | MALDIVE |
| 6 | AUSTRALIAN 84 | 49 | GUAM 63 |
| 7 | SOUTH ASIA | 50 | GUADAL CANAL |
| 8 | SOUTH AMERICA | 51 | HONG KONG 63 |
| 9 | GREENLAND | 52 | DIEGO GARCIA |
| 10 | NAD-83 | 53 | JOHNSTON |
| 11 | ICELAND 55 | 54 | SRI LANKA |
| 12 | IRELAND 65 | 55 | KELGUELEN |
| 13 | NEW ZEALAND | 56 | CAYMAN BRAC |
| 14 | EUROPEAN 79 | 57 | LIBERIA 64 |
| 15 | ROME 40 | 58 | MAHA 71 |
| 16 | SOUTH AFRICA | 59 | SALVAGE |
| 17 | SAUDI ARABIA | 60 | ERITREA |
| 18 | INDIAN/NEPAL | 61 | MOROCCO |
| 19 | PHILLIPPINES | 62 | MIDWAY 61 |
| 20 | ENGLAND | 63 | NIGERIA |
| 21 | HAWAII | 64 | TRINIDAD |
| 22 | DJAKARTA | 65 | CORVO/FLORES |
| 23 | MALAYSIA | 66 | EGYPT |
| 24 | JAPAN | 67 | OMAN |
| 25 | ETHIOPIA | 68 | CANARY |
| 26 | SOMALIA | 69 | PITCAIRN |
| 27 | BAHRAIN | 70 | SOUTH CHILE |
| 28 | COCOS | 71 | PUERTO RICO |
| 29 | ARC 50 | 72 | QATAR |
| 30 | ARC 60 | 73 | MASCARENE |
| 31 | ASCENSION | 74 | SANTO |
| 32 | IWO JIMA | 75 | SANTA MARIA |
| 33 | TERN | 76 | EAST FALKLAND |
| 34 | ST. HELENA | 77 | PORTO SANTO |
| 35 | MARCUS | 78 | FAIAL |
| 36 | EFATE | 79 | EAST MALAYSIA |
| 37 | BERMUDA | 80 | TRISTAN |
| 38 | COLOMBIA | 81 | FIJI |
| 39 | ARGENTINA | 82 | MARSHALL |
| 40 | PHOENIX | 83 | SURINAM |
| 41 | FLORIDA | 84 | FINLAND |
| 42 | TUNISIA | 85 | SWEDEN |